Low Noise Laser Driver ATLS1A103D
Evaluation Board Rev. 1.0

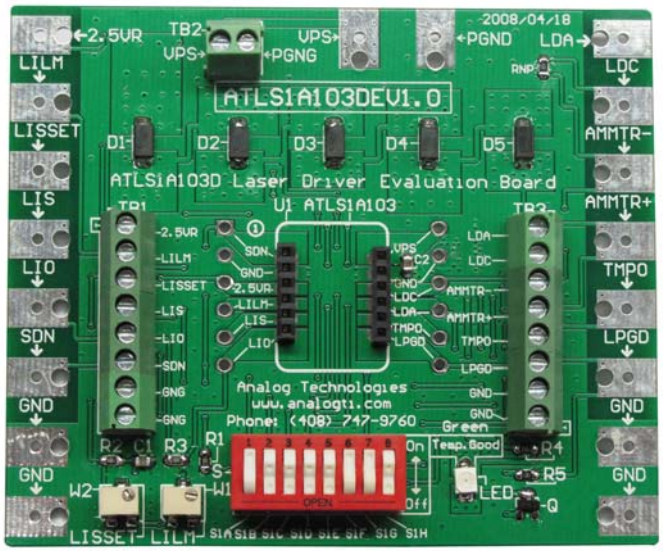

Figure 1. Physical Photo of ATLS1A103DEV1.0

FEATURES

- Come with a dummy laser on the board.
- Use the dummy laser to emulate expensive real laser first.
- Allow setting the output current conveniently.
- Evaluate the laser controllers (listed below) conveniently.

APPLICATIONS

Evaluate these laser drivers:
ATLS100MA103D, ATLS200MA103D, ATLS250MA103D, ATLS500MA103D and ATLS1A103D; ATLS100MA104D, ATLS250MA104D, ATLS500MA104D and ATLS1A104D; ATLS250MA106D and ATLS500MA106D.

INTRODUCTION

The ATLS1A103D is an electronic module designed for driving diode lasers with ultra low noise current and DIP package. The output voltage range is from 1.5V to 4V when powered by a 5V power supply.

This evaluation board, ATLS1A103DEV1.0, is designed for evaluating ATLS1A103D laser driver module conveniently, can also be used for evaluating ATLS100MA103D, ATLS200MA103D, ATLS250MA103D, ATLS500MA103D, and so on. It is recommended to read this application note with the driver datasheet which provides more detail information about the specifications and application guidance for the laser driver module.

The main purpose of using the evaluation board is to let the controller drive a voltage configurable unbreakable dummy laser diode on the board to emulate users' actual expensive laser diode with a programmable current. After making sure the controller works properly and all the features and the set-values meet the requirements of the application, the users can disconnect the dummy laser from the controller by turning a switch and connect a real diode laser onto proper connections of the board. The user will be able to set and monitor the output current, read the controller's temperature, monitor the working status of the controller, etc.

BOARD DESCRIPTION

The ATLS1A103DEV1.0 Evaluation Board is consisted of a complete application circuit for driving a laser diode. It can set the output current, the output current limit, has an LED for indicating the working status of the controller, has numerous connection pads and terminal connectors for making connections with external components and instruments. Its physical photo of ATLS1A103DEV1.0 is shown in Figure 1.

The silkscreen layer of the evaluation board is shown in Figure 2 with other top layers, including top silkscreen, top copper, top solder mask, and multilayer (vias). Figure 3 only shows the image of top silkscreen layer. There is no component in the bottom side of the board, so that there is no bottom silkscreen layer image.

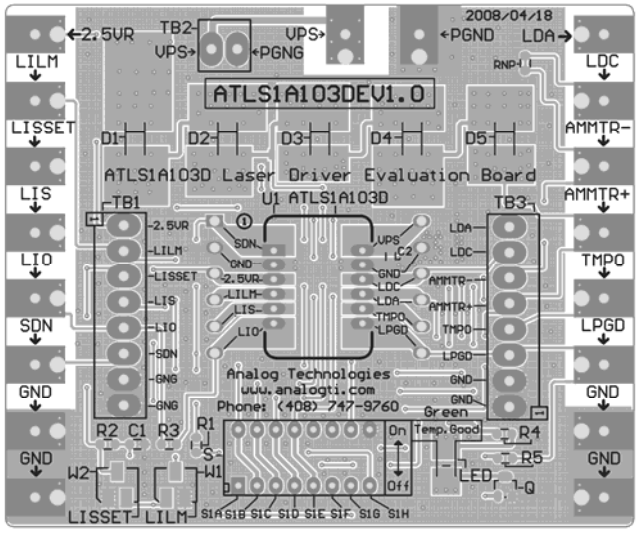

Figure 2. Top Silkscreen Layer with Other Top Layers

There are solder pads on the left, top and the right edges of the board. These pads can be used for connecting the external instruments or components with and the connections can be made by either soldering wires or clipping by alligator clips.

There are 3 terminal blocks also located on the left, top and the right side of the board, their connectors are for the same nodes of the solder pads. See the silkscreen image in Figure 3.

©Copyrights 2000 – 2017, Analog Technologies, Inc. All Rights Reserved. Updated on 3/9/2017

On the bottom center of the board, there is a switch bank. The 2 potentiometers are located on the left side the switch bank.

When the controller works perfectly, the LED on the bottom right location will be lit up.

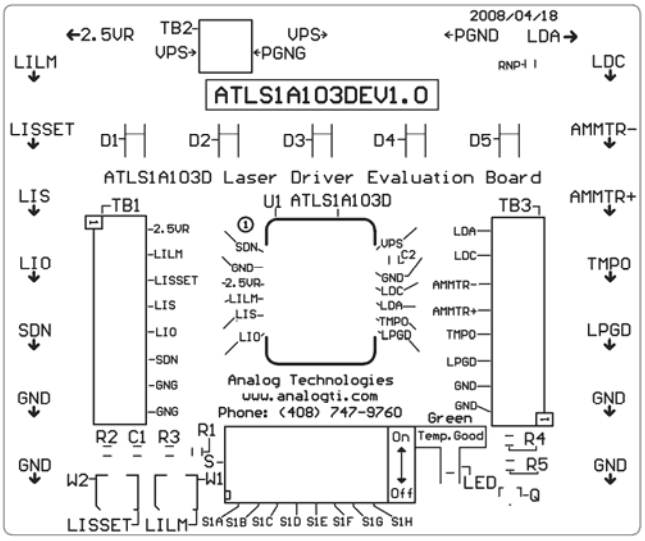

Figure 3. Top Silkscreen

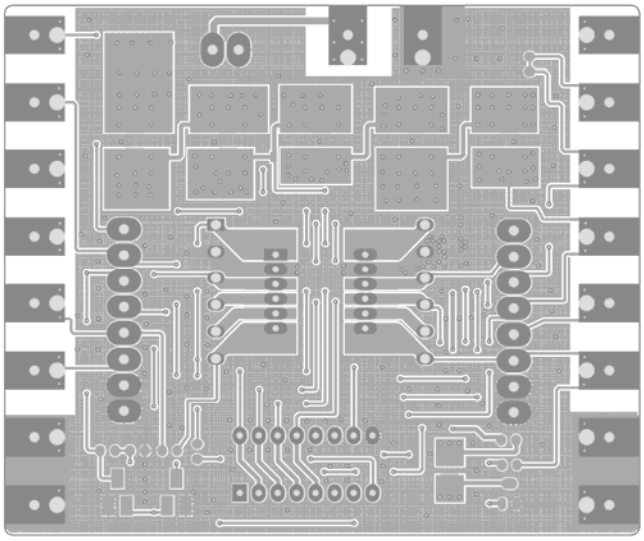

Figure 4. Top Layers without Top Screen Layer

Figure 4 shows the top layers without the silkscreen layer. Figure 5 below shows the bottom layers, including bottom copper, bottom solder mask, and multilayer (vias). Please notice that this is a "see through" image from the top side.

Figures 4 and 5 can be used as a layout reference for designing a system using the ATLS1A103D in the system. These are the main points:

1. Connect the power supply return node directly to the PGND pin of the controller before connecting it to any other points. For thermal management purpose, the returned node was not done in this way on the evaluation board.

2. Use as large copper area as possible for the PCB traces of the solder pads of all the pins so that these copper areas become heat-sinks and help dissipating the heat generated by the controller.

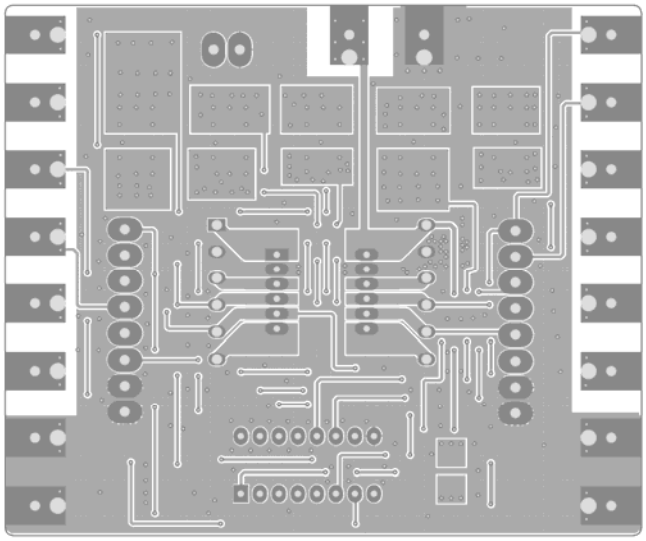

Figure 5. Bottom Layers

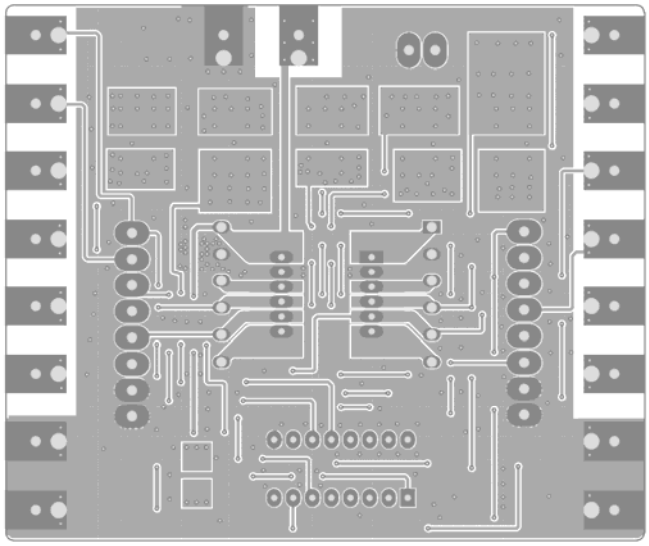

Figure 6. Mirrored Bottom Layers

Figure 6 shows the mirrored bottom layers which is a directly-seen image from the bottom side.

The ATLS1A103D laser controller module is located in the center of the ATLS1A103DEV1.0 Evaluation Board. The voltages of all its pins can be measured directly by probing the vias on the left and right side of the module sockets which are connected directly with pins of the electronic module. Some of the pins are also connected to the connectors of the 3 terminal blocks, and/or the soldering pads on the edges of the board. The names of all these nodes are marked on the board.

Please notice that when the board is working, the 5 diodes on the top center may get hot, therefore, avoid touching them with your fingers.

©Copyrights 2000 – 2017, Analog Technologies, Inc. All Rights Reserved. Updated on 3/9/2017

The schematic is shown in Figure 7 below.

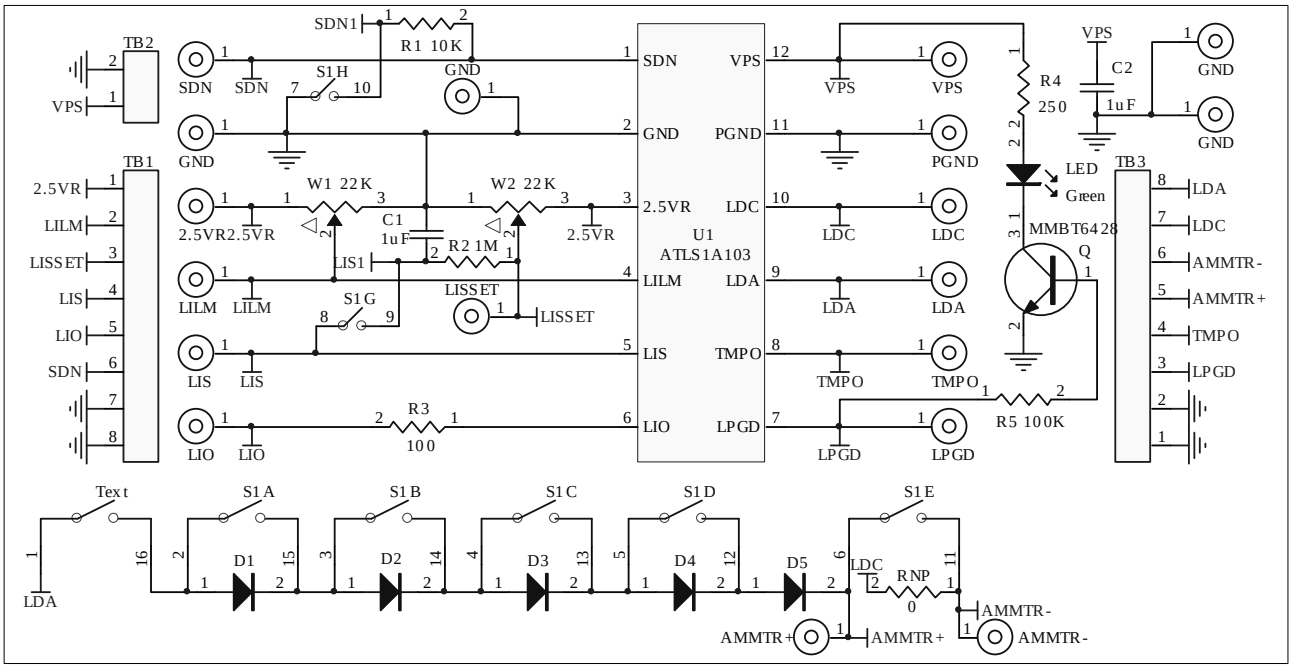

*CW: Clock-wise

Figure 7. Schematic of ATLS1A103DEV1.0

GETTING STARTED

1. Hook up the power supply. There are 2 solder pads in the upper center area on the edge for connecting the power supply voltages. The connection can be done by clipping or soldering on the pads, or use the screws to lock in 2 wires through the terminal block TB2, see Figure 1. Usually the power supply is set to 5V. If the output maximum voltage is for sure know to be always at low value, such as 2.5V, a power supply of about having 1V higher voltage than the maximum output voltage, i.e. 3.5V, can be used. When using a lower voltage power supply, the power consumption of the controller will get smaller, thus, the controller will be working under lower temperature rise.

2. Check the voltage reference. Use a voltmeter to check the voltage reference pin 2.5VR having an accurate 2.5V.

3. Turn on and off the controller. This can be done by either turning off the power supply or turning off the shut-down pin of the controller. To do the latter, turn the switch S1H to its upper position to turn off the controller, which shorts circuit the shutdown pin SDNG to the ground, or turn the switch S1H to its lower position to turn on the controller.

4. Monitor the output current by using the LIO pin voltage. Measuring the voltage of the LIO pin using a voltmeter (measure between the LIO pin and the ground node) will allow monitoring the output current. The relationship between the LIO voltage and the output current is linear:

Table 1.

Part #	Formula
ATLS100MA103D	$I_{OUT} = 0.1 \times LIO/2.5V$ (A)
ATLS200MA103D	$I_{OUT} = 0.2 \times LIO/2.5V$ (A)
ATLS250MA103D	$I_{OUT} = 0.25 \times LIO/2.5V$ (A)
ATLS500MA103D	$I_{OUT} = 0.5 \times LIO/2.5V$ (A)
ATLS1A103D	$I_{OUT} = LIO/2.5V$ (A)

where I_{OUT} is the output current in Ampere,

LIO stands for the voltage at the LIO pin.

5. Monitoring the output current directly by using an Ammeter. Comparing with the approach to measure current by measuring the voltage of LIO pin as described above, Measuring the output current directly by using an Ammeter is not recommended when a real laser is connected, because these potential problems:

   A. The Ammeter brings in EMI (Electro-Magnetic Interference) noise.

   B. The Ammeter has voltage drop, which decreases the maximum output voltage.

   C. **If the Ammeter is not connected well or there is an intermittent disconnection at any portion of the circuit, the real laser may be damaged permanently.**

©Copyrights 2000 – 2017, Analog Technologies, Inc. All Rights Reserved. Updated on 3/9/2017

If the user really needs to do it in this way, this is the procedure to do so:

A. Use the terminal block on the right side, the 3r and the 4th conductors, insert the Ammeter between AMMTR+ pin and AMMTR– pin.

B. Turn the switch S1F to its lower off position, thus the output current goes through the ammeter and can be measured by reading Ammeter's value.; when the switch S1F is placed in the upper on position, the ampere meter is shorted, thus, it does not measure the output current, see the schematic shown in Figure 7.

C. Set the Ammeter to a fixed gain or the high value setting, such as 10A. Otherwise, the automatic ranging setting circuit of the Ammeter may cause some noise to the laser when the current range setting is switched inside the Ammeter.

6. Test the controller with the "dummy laser". The 5 diodes on the board, D1 to D5, can form a "dummy laser" to act as the laser diode in the place of a real laser so that in case there is a problem in the circuit, the expensive laser would not be damaged, see schematic in Figure 7. Turn the switch S1A to the on position (upper), to connect the "dummy laser" to the controller. Turning switches S1B, S1C, S1D and S1E, up and down will increase (turning down the switches) and decrease (turning up the switches) the forward voltage of the "dummy laser" which can be measured by a volt meter between the LDA and the ground. Each diode can increase or decrease the output forward voltage by about 0.7V when the output current is 1A. **Warning: when output 1A current, the diodes may get very hot, don't put your fingers on them.** The switch bank and their corresponding diodes are shown in the table below. The diode D5 is always activated so that the total forward voltage range is from 0.7V to 0.7V + 0.7×4 = 3.5V. Please be aware of this fact: when the output voltage is low by shorting circuit all the diodes, the controller will need to consume a lot of power and may get too hot that the internal temperature protection circuit shut off the controller automatically. When this happens, wait for a few seconds, let the controller cool down, the controller will restart by itself again after the temperature is lowered to certain level. This is the way to calculate the power consumption of the controller:

P_controller = $I_{OUT} \times (VPS - V_{OUT})$ (W),

where P_controller is the power consumption of the controller, I_{OUT} is the output current, VPS is the power supply voltage applied onto the VPS pin of the controller, V_{OUT} is the output voltage which is also the voltage on the LDA pin. The unit is power. When the controller is placed in a free air, the thermal resistance is about 60°C/W.

Table 2. The switch controls corresponding diode

Switch Name	Corresponding Diode
S1B	Diode D1
S1C	Diode D2
S1D	Diode D3
S1E	Diode D4

7. Disconnect the dummy laser from the controller. This can be simply done by turning switch S1A to its lower off position.

8. Monitor the output voltage. This can be done by using a volt meter to measure the voltage between LDA and ground. This node is available at the edge pad (upper right corner), the terminal block conductor, and the controller pin via. **If the controller works well, the output current should remain the same as the output voltage changes.**

9. Set the output current. Adjusting the potentiometer W2 will set the output current from 0 to 1A by changing the voltage on the LIS pin. Due to the low noise nature of the controller, the actual controllable minimum current is about 10nA, the lowest one available on the market to our knowledge. The relationship between the LIS voltage and the output current is:

Table 3.

Part #	Formula
ATLS100MA103D	$I_{OUT} = 0.1 \times LIS/2.5V$ (A)
ATLS200MA103D	$I_{OUT} = 0.2 \times LIS/2.5V$ (A)
ATLS250MA103D	$I_{OUT} = 0.25 \times LIS/2.5V$ (A)
ATLS500MA103D	$I_{OUT} = 0.5 \times LIS/2.5V$ (A)
ATLS1A103D	$I_{OUT} = LIS/2.5V$ (A)

where I_{OUT} is the output current,

LIS stands for the voltage at the LIS pin.

The output current follows the LIS pin voltage only under these conditions:

A.The output forward voltage of the load is lower than 4V at the current desired to set.

B.The current limit is higher than the set-point current desired to set. The output f the laser.

Please notice that the potentiometer W2 set the voltage on the node LIS1, which results in a low-pass filtered low noise voltage. This voltage goes through switch S1G and is connected to the LIS pin of the controller when the switch S1G is on the upper on position. In case the LIS pin needs to be controlled by another external signal source for modulating the output current, turn this switch S1G on the lower that is off position, to disconnect the LIS pin from the LIS1 node.

Since the LIS1 node has a high internal impedance, around

©Copyrights 2000 – 2017, Analog Technologies, Inc. All Rights Reserved. Updated on 3/9/2017

1M , do not use a voltmeter to probe this pin for measuring the voltage, otherwise error will occur because the internal resistance of the voltage meter will lower the output voltage on the LIS1 node.

To measure the LIS1 voltage accurately, use a voltmeter to probe the LISET node, which is made accessible on the solder pad or the terminal block conductor of TB1, all on the left side of the board.

10. Set the output current limit. Adjusting the potentiometer W1 will set the output current limit from 0 to 1.1A by setting the voltage on the LILM pin. The relationship between the LILM voltage and the output current is:

    I_out_lim = 1.1×LILM/2.5V (A),

    where I_out_lim is the output current limit,

    LILM stands for the voltage at the LILM pin.

    When the output current set by the LIS pin goes higher than the current limit set by the LISLM pin, the controller will turn off the controller; after being turned off, the controller restarts by itself and ramp up the output current by the soft start circuitry, if the output current still goes beyond the current limit, the controller shuts off again and repeat the resetting process. The laser is thus protected from being damaged by over current. The output current is a saw-tooth shape signal under protection mode.

11. Modulate the output current by an external signal source. This can be done by connecting the external signal source to the LIS node, which is accessible by the LIS solder pad or the LIS conductor on the terminal block TB1, both on the left side of the board. Make sure:

    A.The peak of the signal will not set the output current to too high a value that may damage the laser diode, if a real laser is connected to the output.

    B.The current limit is set to a proper value, thus, the controller will not be shut-off by the current limit circuit because the output current exceeding the current limit.

    C.The switch S1G is turned to the lower off position, thus, the LIS pin will solely controlled by the external source signal, not by the LIS1 node.

    D. The control bandwidth of the LIS pin is around 2MHz, that is: when inputting a pure square wave signal to the LIS pin, the rise and fall time of the output current will be about 0.35/2MHz = 175nS (nano-second). Please be aware of this: the output current should be seen on an oscilloscope by probing the LIO pin. Probing LDA pin will see a distorted version of the output current because the dummy load or a real laser diode is a non-linear device and also has capacitance between the 2 terminals, thus the voltage waveform is not always proportional to the current waveform.

12. Loop good indication. When the controller works perfectly, i.e., the output current equals the set-point current set by LIS pin, the LED on the lower right corner of the board will be lit up. Otherwise, it will be dark when the power supply is on and the controller is being shut off (turning the shutdown switch S1H to upper position) or the output voltage is beyond 4V at the current set by the LIS pin.

13. Monitor the internal temperature of the controller. The controller internal temperature can be monitored by measuring the TMPO pin voltage. The relationship between the LMPO voltage and the temperature is:

$$T = -1525.04 + 10^3\sqrt{2.4182 + \frac{1.8015 - TMPO}{3.479}}\,(^\circ C) \quad (1)$$

    where TMPO is the voltage on the TMPO pin.

    This formula can be approximated by a linear equation:

$$T = 192.7 - 90.31 \times TMPO(^\circ C) \quad (2)$$

    Within the most commonly used temperature range of between 0 C to 100 C, the maximum error occurs at about 1.5V, at which the temperature error between the calculated data by using the formula (1) and the approximated data obtained by using the linear equation (2) is about 0.4 C, with the linear data being a little lower. The curves of the 2 sets of the data are plotted in Figure 8.

    Please notice that the TMPO pin has a weak driving capability: the maximum sourcing current is 1 A and the maximum sinking current is 40 A.

    The TMPO pin can also be used as an input control pin: when forcing the TMPO voltage to below 0.4V, the laser controller will be shutdown.

    Within the most commonly used temperature range of between 0°C to 100°C, the maximum error occurs at about 1.5V, at which the temperature error between the calculated data by using the formula (1) and the approximated data obtained by using the linear equation (2) is about 0.4°C, with the linear data being a little lower. The curves of the 2 sets of the data are plotted in Figure 8.

    Please notice that the TMPO pin has a weak driving capability: the maximum sourcing current is 1μA and the maximum sinking current is 40μA.

    The TMPO pin can also be used as an input control pin: when forcing the TMPO voltage to below 0.4V, the laser controller will be shutdown.

14. Connecting external ADCs (Analog to Digital Converters) and DACs (Digital to Analog Converters). The ADCs can be utilized for monitoring the analog voltages on certain pins, such as LIO, TEMPO, LISSET, etc., and the DACs can also be utilized for setting the LIS and/or LISLM pin voltages. The voltage reference from the controller can be used as the voltage reference for the ADCs and DACs.

15. Connecting a real laser diode to the evaluation board. After

©Copyrights 2000 – 2017, Analog Technologies, Inc. All Rights Reserved. Updated on 3/9/2017

making sure that the controller works properly by going through the above steps, a real laser diode can be connected to the evaluation board. This is the procedure:

A. Set the output current and the current limit to the values desired by driving the dummy laser on the board as described above. The current limit is usually set to the 1.1 times of the output current.

B. Solder the laser diode terminal wires to the LDA and LDC solder pads, or use the LDA and LDC conductors on the terminal block TB3 and lock the wires by using the screws. Make sure that the connections are tight and secure, no intermittent disconnection will occur.

C. Set the output forward voltage to 1.4V by switching S1A, S1B, S1C and S1D to the upper on position. Turn on the power supply, and see everything works perfectly as described above.

D. Turn off the power, turn the switch S1A to the lower off position and turn on the power again. After this moment, be more careful in doing anything on the board, because any mistake in operating the board or causing intermittent disconnections for any connections on the board may result in damaging the laser diode permanently.

E. If everything still works fine after step D above, the user can proceed to testing the laser itself. The output current and current limit can be adjusted while the laser is turned on, but make sure that the output current will never exceed the laser's current limit.

F. In case there are any suspicious or real problems, disconnect the real laser and use the dummy laser for debugging.

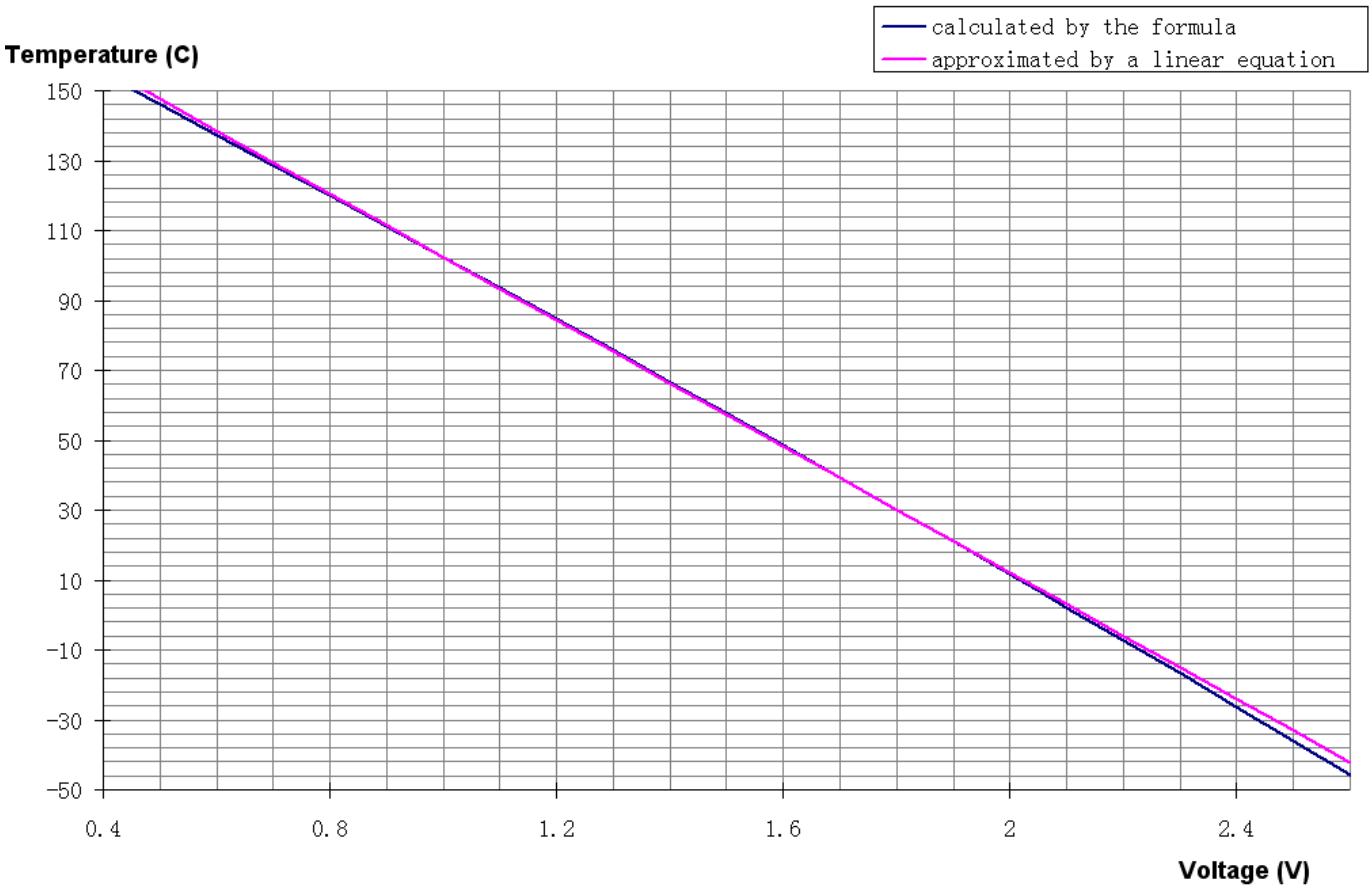

Figure 8. Controller Internal Temperature vs. TMPO Voltage

©Copyrights 2000 – 2017, Analog Technologies, Inc. All Rights Reserved. Updated on 3/9/2017

ORDERING INFORMATION

Table 4. Unit price

Part Number	Description	1 – 9	≥10
ATLS1A103DEV1.0	Laser controller ATLSXA103D evaluation board Rev. 1.0 It is used to evaluate these laser drivers: ATLS100MA103D, ATLS200MA103D, ATLS250MA103D, ATLS500MA103D and ATLS1A103D; ATLS100MA104D, ATLS250MA104D, ATLS500MA104D and ATLS1A104D; ATLS250MA106D and ATLS500MA106D.	$25.0	$22.5

NOTICE

1. ATI warrants performance of its products for one year to the specifications applicable at the time of sale, except for those being damaged by excessive abuse. Products found not meeting the specifications within one year from the date of sale can be exchanged free of charge.
2. ATI reserves the right to make changes to its products or to discontinue any product or service without notice, and advise customers to obtain the latest version of relevant information to verify, before placing orders, that information being relied on is current and complete.
3. All products are sold subject to the terms and conditions of sale supplied at the time of order acknowledgment, including those pertaining to warranty, patent infringement, and limitation of liability. Testing and other quality control techniques are utilized to the extent ATI deems necessary to support this warranty. Specific testing of all parameters of each device is not necessarily performed, except those mandated by government requirements.
4. Customers are responsible for their applications using ATI components. In order to minimize risks associated with the customers' applications, adequate design and operating safeguards must be provided by the customers to minimize inherent or procedural hazards. ATI assumes no liability for applications assistance or customer product design.
5. ATI does not warrant or represent that any license, either express or implied, is granted under any patent right, copyright, mask work right, or other intellectual property right of ATI covering or relating to any combination, machine, or process in which such products or services might be or are used. ATI's publication of information regarding any third party's products or services does not constitute ATI's approval, warranty or endorsement thereof.
6. IP (Intellectual Property) Ownership: ATI retains the ownership of full rights for special technologies and/or techniques embedded in its products, the designs for mechanics, optics, plus all modifications, improvements, and inventions made by ATI for its products and/or projects.

2352 Walsh Ave. Santa Clara, CA 95051. U. S. A. Tel.: (408) 748-9100, Fax: (408) 748-9111 www.analogtechnologies.com

©Copyrights 2000 – 2017, Analog Technologies, Inc. All Rights Reserved. Updated on 3/9/2017