Figure 1. Photo of Actual ATLS4A202D

FEATURES

High Efficiency: ≥90%

Constant Current Output

Maximum Output Current: 4A

Current Output Noise: 0.05%

High Stability: 100ppm/°C

PWM Switching Frequency Synchronizable

Zero EMI

Compact Size

100 % Lead (Pb)-free and RoHS Compliant

DIP Package Available

APPLICATIONS

Driving laser diodes with low noise, including DPSSL, EDFA, fiber laser, direct diode lasers, etc.

DESCRIPTION

This laser driver is an electronic module designed for driving diode lasers with up to 4A constant current, high efficiency, low noise, high reliability, zero EMI, and small package. Figure 1 shows the photo of actual ATLS4A202D.

It provides these functions: laser constant current control, laser current monitoring, over current and thermal protection, switching frequency synchronization, laser diode status indication, soft start, and shut down.

It comes with a high stability low noise 2.5V voltage reference output which can be used for setting the output current. The reference output can also be used for the ADCs (Analog to Digital Converters) and/or DACs (Digital to Analog Converters) to monitor the laser output current and/or set laser output current respectively.

The frequency synchronization of this laser driver allows using an external digital signal to synchronize the internal PWM output stage of the laser driver, to eliminate frequency beating interferences between the laser drivers and other switch mode electronic circuits on the same PCB.

The external signal needs to be in the range of 520kHz to 800kHz.

If other frequency is needed, contact us, we may be able to adjust the internal PWM frequency for you. The default switching frequency of the internal PWM output stage is 500kHz.

Warning: This module can only be soldered manually on the board by using a solder iron of < 310ºC (590ºF), never let the module go through a reflow oven process.

The ATLS4A202D is packaged in a 6 sided metal enclosure, which blocks EMIs (Electro-Magnetic Interferences) to prevent the driver and other electronics from interfering with each other.

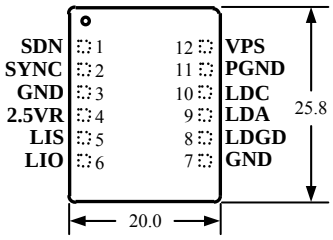

Figure 2. Pin Names and Locations

Figure 2 is the actual size top view of the ATLS4A202D, which shows the pin names and locations. Its thickness is 5.0mm.

The ATLS4A202D pin functions are shown in Table 1.

Table 1 Pin Function Descriptions

Pin #	Name	Type	Description
1	SDN	Digital Input	Shut down control. Negative logic, at the internal chip control input: >1.4V = enable, <0.95V = shut down, normal threshold voltage = 1.2V.
2	SYNC	Synchronization Input	The default internal switching frequency is 500kHz. This pin can be connected to an external clock signal of which the frequency should be about 10% to 15% higher than

©Copyrights 2000-2016, Analog Technologies, Inc. All Rights Reserved. Updated on 3/22/2016

			the default switching frequency. In this way, the driver will be switching at the same frequency with the external clock signal, eliminating beating interferences with other switch mode power supplies, laser drivers, TEC controllers, etc. If other default switching frequency is needed, please contact us, it can be specified from 300kHz to 700kHz.
3, 7	GND	Signal Ground	Signal ground pin. Connect POT (potentiometer), ADCs and DACs grounds to here.
4	2.5VR	Analog Output	Reference voltage. It can source 3mA max., with $<5\mu V_{P-P}$ noise between 0.1 to 10Hz and $<$25ppm/°C (max.) stability.
5	LIS	Analog Input	Laser current setting voltage. There is an input resistor of 10M tied to GND on this port. Setting it from 0V to 2.5V will set the laser current from 0A to 4A linearly.
6	LIO	Analog Output	Laser current output indication. 0V to 2.5V indicates the laser current being from 0A to 4A linearly.
8	LDGD	Digital Output	Laser diode good indication. When this pin is high, >2V, the control loop is working properly. When this pin is low, <0.3V, the laser diode is bad, or there is a short or open circuit at the laser diode.
9	LDA	Analog Output	Laser diode anode. Connect it to the anode of the laser diode.
10	LDC	Analog Output	Laser diode cathode. Connect it to the cathode of the laser diode.
11	PGND	Power Ground	Power ground pin. Connect this pin directly to power supply return terminal.
12	VPS	Power Input	Power supply voltage. The driver works from V_{PS} = 3.0V to 5.5V.

SPECIFICATIONS

Table 2 Characteristics ($T_{ambient}$ = 25°C)

Parameter	Value	Unit
Laser driver efficiency	≥90	%
Maximum output current	4	A
Current output noise	0.05	%
Stability	±100	Ppm/°C
Laser current control signal level	0 ~ 2.5	V
Control accuracy	±0.2	%
Laser current indication signal level	0 ~ 2.5	V
Indication accuracy	±0.2	%
Output reference voltage	2.5	V
Power supply voltage range	3.0 ~ 5.5	V
Operating case temperature	–40 ~ 125	°C

©Copyrights 2000-2016, Analog Technologies, Inc. All Rights Reserved. Updated on 3/22/2016

OPERATION PRINCIPLE

The block diagram of the driver is shown in Figure 3. The shut down control circuit accepts signals from 3 sources: external shut down, over current and over temperature signals. When one of these signals is activated, the driver is shut down. Only when all these 3 signals go up, the soft start circuit starts enabling the low noise driver.

It comes with a laser diode status indication circuit. When LDGD pin is high, >2V, the control loop is working properly. When this pin is low, <0.3V, the laser diode is bad, or there is a short or open circuit at the laser diode.

The high stability low noise 2.5V voltage reference can be used for setting the output current by setting the voltage on this LIS pin, and also be used for the external ADCs and/or DACs as voltage references.

An internal soft start circuit allows a slow start up and a quick shut down for the laser control loop.

The current measurement circuit monitors the output current and sets the current indication voltage on the LIO pin. The over current protection circuit shuts down the driver upon detecting the output current exceeds the pre-set value.

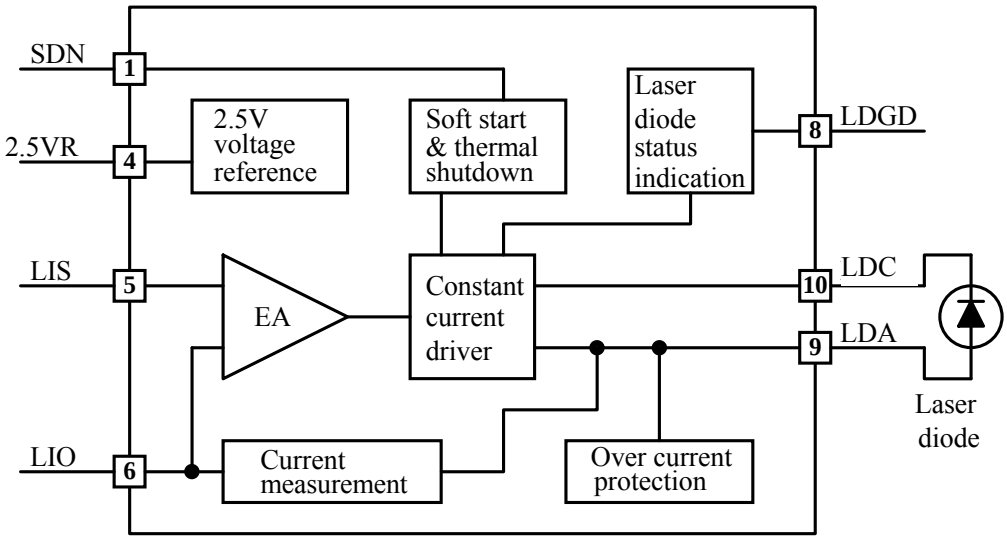

Figure 3. Block Diagram

APPLICATION INFORMATION

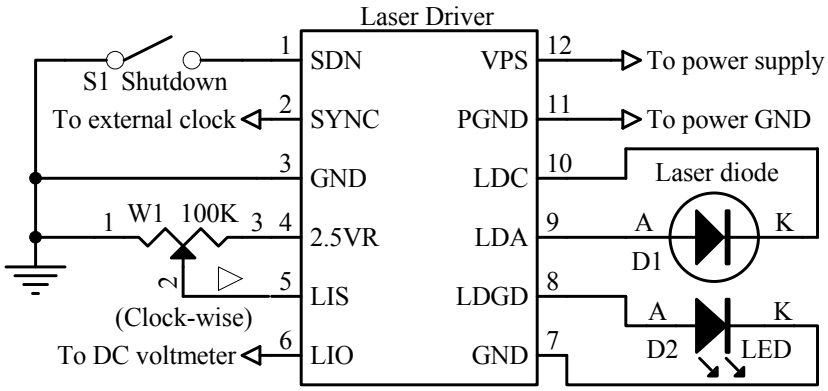

Figure 4. A Typical Stand-alone Application Schematic

Figure 4 shows a typical stand-alone application circuit.

The switch S1 is an external switch for shutting down or enabling the controller. When shorting SDN to ground, i.e. to close the switch S1, the controller is shut down; when leave the switch open, the internal pull up circuit pulls the SDN pin high and the controller is enabled. The internal logic threshold on the SDN pin is: >1.4V for enabling, and <0.95V for shutting down, normal threshold voltage is 1.2V. The switch S1 can also be replaced by an electronic switch, such as an I/O pin of a micro-controller, an either open drain or push-pull output digital port, see Figure 5. If not using a switch to control the laser, leave the SDN pin unconnected.

The SYNC pin is for using an external signal to synchronize the internal switching frequency, to eliminate

©Copyrights 2000-2016, Analog Technologies, Inc. All Rights Reserved. Updated on 3/22/2016

the beating interference between this laser controller and other switch mode power supply on the same PCB. If the SYNC is not connected, the default internal switching frequency is 500kHz. When using this pin, it must be connected by an external clock signal of about 550kHz to 570kHz, about 10% to 15% higher than the default switching frequency of 500kHz. After using this function, the driver will be switching at the same frequency with the external clock signal, eliminating beating interferences. If other switching frequency is needed, please contact us, it can be specified from 300kHz to 700kHz.

In Figure 4, the potentiometer W1 is used to set the output current. Setting LIS from 0V to 2.5V will set the laser current from 0 to 4A linearly.

The laser diode D1 is connected between LDA and LDC pins. It is worth mentioning that the power supply return terminal should be connected to the pin 11, PGND, and the cathode of the laser diode should be connected to the pin 10, LDC. These 2 nodes should not be connected together externally, although they are connected together internally already by the driver circuit.

In Figure 4, the LED D2 is used to indicate laser diode status. When LDGD pin is high, >2V, the laser diode control loop is working properly. When LDGD pin is low, <0.3V, the laser diode is bad, or there is a short or open circuit at the laser diode. The LDGD pin can also be connected to a digital input pin of a micro-controller, when software/firmware is utilized in the system, see Figure 5. A typical micro-processor-based application circuit is shown in Figure 5.

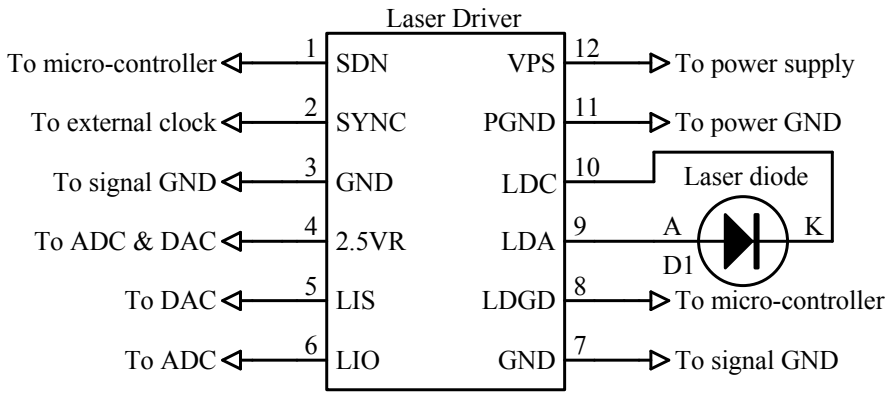

Figure 5. A Typical Micro-processor-based Application Schematic

Turning the Driver On and Off

The driver can be turned on and off by setting the SDN pin high and lower respectively. It is recommended to turn the driver on by this sequence:

To turn on: turn on the power by providing the power supply voltage to the driver, turn on the driver by releasing the SDN pin.

To turn off: turn off the driver by lowering the voltage of SDN pin, turn off the power by stopping the voltage supply on the VPS pin.

When not controlling by the SDN pin: leave it unconnected and turn on and off the driver by the power supply.

Adjusting the Output Current

The output current is set by adjusting W1, which sets input voltages on LIS, pin 5, see Figure 4. The output current will be:

I_output (A) = $1.6 \times V_{LIS}$ (V).

LIS can be configured by using a DAC, to replace the W1 in Figure 4. Please make sure that the DAC has a low output noise, or, if no modulation is needed, an RC low pass filtered can be inserted between the DAC and the LIS pin.

The LIO pin indicates the actual output current of the laser controller. It can still be used to monitor the output current. When this pin's voltage changes from 0V to 2.5V, it indicates the laser current is from 0 to 4A linearly.

Monitoring the Output Current

The output current of the driver can be monitored by measuring the voltage on the LIO pin. This feature is very useful for micro-controller based system where an ADC is available and monitoring the current in real time is required. This pin provides a very low noise voltage signal which is proportional to the output current:

LIO (V) = $0.625 \times$ I_output (A).

For example, when the output current is 4A, the LIO pin voltage is 2.5V.

The LIO pin can be used to drive an ADC directly, or measured by a multimeter. Please be aware of this: using a digital multimeter to measure the LIO pin's voltage may inject noise which is generated by the digital circuit of the meter, this noise can be amplified by the laser controller and shows up at the output pin, LDA. Therefore, it is not

©Copyrights 2000-2016, Analog Technologies, Inc. All Rights Reserved. Updated on 3/22/2016

recommended to use a digital meter to measure the LIO pin's voltage when the laser is working.

Driver Power Consumption

The power consumption of the driver can be calculated by:

$P_driver = I_input \times V_{PS} - I_output \times V_{LDA}$,

where I_output is the output current;

I_input is the power supply intput current;

V_{PS} is the power supply voltage;

V_{LDA} is the voltage across the laser diode;

A diode laser is a high value and vulnerable device. Any faults in connections or damages caused to the driver during soldering process may damage the laser permanently.

To protect the laser, it is highly recommend to use 2 to 3 regular diodes of > 8A to form a "dummy laser" and insert it in the place of the real laser diode, between the LDA and LDC pins, when powering up the driver for the first time. Use an oscilloscope to monitor the LDA voltage at the times of power-up and power-down, make sure that there is not over-shoot in voltage. At the same time, use an ammeter in serious with the dummy laser, to make sure that the output current equals the desired value set by the LIS pin.

After thorough checking the laser driver being free of faults, disconnect the dummy laser and connect the real laser in place.

The output voltage range for the laser is between 0.5 to 4V when powered by a 5V power supply, and between 0.4 to 2.6V when powered by a 3.3V power supply.

OUTLINE DIMENSIONS AND MOUNTING

The driver comes in only one package: through hole mount, being often called DIP (Dual Inline Package) or D (short for DIP) package, and has a part number: ATLS4A202D. The dimensions of the DIP package driver are shown in Figure 6.

$\eta = I_output \times V_{LDA}/(I_input \times V_{PS})$.

When the P_driver exceeds 1W, a heat sink might be used to lower the temperature of the laser controller. Another option is: reducing the power supply voltage V_{PS}. Please make sure:

$V_{PS} \geq 1.2 \times V_laser_diode_max$,

where V_laser_diode_max is the maximum possible laser diode voltage.

First Time Power Up

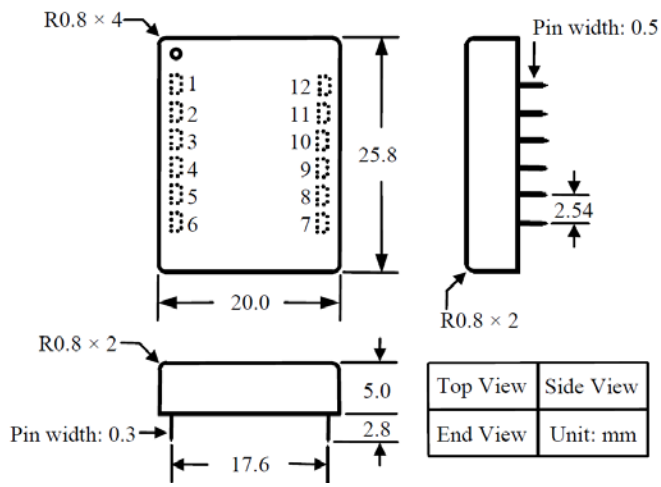

Figure 6. Dimensions of the DIP Package Driver

Figure 7 shows the top view PCB foot-print for mounting the laser driver.

"Tent" (i.e. cover the entire via by the solder mask layer) all the vias under the driver, otherwise, the vias can be shorted by the bottom plate of the driver which is internally connected the ground.

See Figure 7 and 8, it is recommended to use large copper fills for VPS, LDC, and the LDA pins, and other pins if possible, to decrease the thermal resistance between the module and the supporting PCB, to lower the module temperature.

©Copyrights 2000-2016, Analog Technologies, Inc. All Rights Reserved. Updated on 3/22/2016

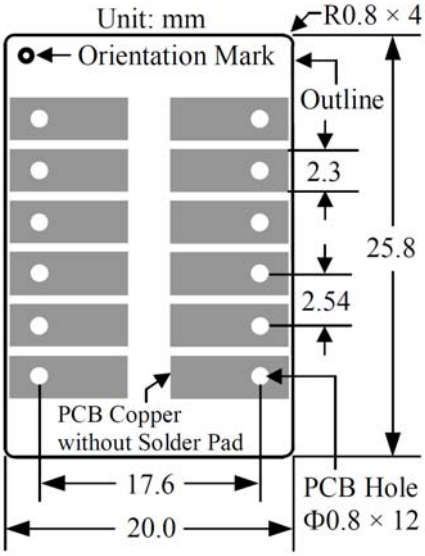

Figure 7. Top View of the PCB Foot-print

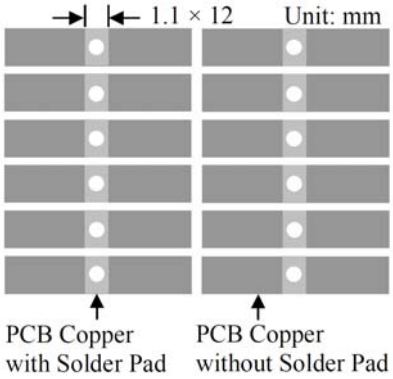

Figure 8. Top View of the Bottom Side PCB Foot-print

Figure 8 shows the top view of the bottom side PCB foot-print.

©Copyrights 2000-2016, Analog Technologies, Inc. All Rights Reserved. Updated on 3/22/2016

WARNING: This module can only be soldered manually on the board by using a solder iron of < 310ºC (590ºF), never let the module go through a reflow oven process.

NOTE: The power supply may have overshoot, when happens, it may exceed the maximum allowed input voltage, 6V, of the controller and damage the controller permanently. To avoid this from happening, do the following:

1. **Connect the controller solid well with the power supply before turning on the power.**
2. **Make sure that the power supply has sufficient output current. It is suggested that the power supply can supply 1.2 to 1.5 times the maximum current the controller requires.**
3. **When using a bench top power supply, set the current limit to >1.5 times higher than the maximum current the controller requires.**

ORDERING INFORMATION

Table 3 Part Number

Part Number	Description
ATLS4A202D	4A constant current driver in DIP package

PRICES

Table 4. Unit Price

Quantity	1 – 9 pcs	10 – 49 pcs	50 – 199 pcs	200-499 pcs	≥500 pcs
ATLS4A202D	$79	$76.6	$72.2	$67.8	$63.4

NOTICE

1. ATI warrants performance of its products for one year to the specifications applicable at the time of sale, except for those being damaged by excessive abuse. Products found not meeting the specifications within one year from the date of sale can be exchanged free of charge.
2. ATI reserves the right to make changes to its products or to discontinue any product or service without notice, and advise customers to obtain the latest version of relevant information to verify, before placing orders, that information being relied on is current and complete.
3. All products are sold subject to the terms and conditions of sale supplied at the time of order acknowledgment, including those pertaining to warranty, patent infringement, and limitation of liability. Testing and other quality control techniques are utilized to the extent ATI deems necessary to support this warranty. Specific testing of all parameters of each device is not necessarily performed, except those mandated by government requirements.
4. Customers are responsible for their applications using ATI components. In order to minimize risks associated with the customers' applications, adequate design and operating safeguards must be provided by the customers to minimize inherent or procedural hazards. ATI assumes no liability for applications assistance or customer product design.
5. ATI does not warrant or represent that any license, either express or implied, is granted under any patent right, copyright, mask work right, or other intellectual property right of ATI covering or relating to any combination, machine, or process in which such products or services might be or are used. ATI's publication of information regarding any third party's products or services does not constitute ATI's approval, warranty or endorsement thereof.
6. IP (Intellectual Property) Ownership: ATI retains the ownership of full rights for special technologies and/or techniques embedded in its products, the designs for mechanics, optics, plus all modifications, improvements, and inventions made by ATI for its products and/or projects.

©Copyrights 2000-2016, Analog Technologies, Inc. All Rights Reserved. Updated on 3/22/2016