Figure 1. Physical Photo of ATLS100MA103S

FEATURES

- Ultra Low Noise: 1.5μA$_{P-P}$ @0.1Hz to 10Hz
- Output Current without Heat Sink: 100mA
- High Absolute Accuracy: <0.1%
- High Stability: <100ppm/°C
- Programmable Current Limit through Separate Port
- Complete Shielding
- Compact Size
- 100 % Lead (Pb)-free and RoHS Compliant
- DIP and SMT Packages Available

APPLICATIONS

Driving laser diodes with low noise, including DPSSL, EDFA, SOA, fiber laser, direct diode lasers, etc.

DESCRIPTION

The ATLS100MA103 is an electronic module designed for driving diode lasers with up to 100mA low noise current. Figure 1 shows physical photo of ATLS100MA103.The output voltage is 1.5V to 4V when powered by a 5V power supply.

When the maximum power consumed by the controller is maintained to <1W, it does not require a heat sink to operate. The controller has temperature compensation network so that the output current maintains the same even as the controller temperature rises.

In case the controller temperature exceeds a preset limit, 120°C, the controller will be shut down by itself to prevent the controller from being damaged by the over heat.

The output current of the ATLS100MA103 can be set by an input voltage linearly or modulated by an external large signal of up to 1MHz in bandwidth, resulting in a minimum 170nS rise and fall times (Large signal) at the output current .

A highly stable low noise 2.5V reference voltage is provided internally for setting the output current. This reference can also be used as the voltage reference for external ADCs (Analog to Digital Converters) and/or DACs (Digital to Analog Converters) which are utilized for converting the analog signals, such as LIO which represents the output current, into digital signals, and/or converting the digital signals into analog ones for setting the analog voltages, such as LIS which sets the output current.

The ATLS100MA103 is packaged in a 6 sided metal enclosure, which blocks EMIs (Electro-Magnetic Interferences) to prevent the controller and other electronics from interfering each other.

This laser driver can be evaluated by our evaluation board, ATLS1A103DEV1.0.

There are 2 packaging versions available: DIP through hole package and surface mount type.

Warning: Both the surface mount and the through hole types of modules can only be soldered manually on the board by a solder iron of < 310ºC (590ºF), not go through a reflow oven process.

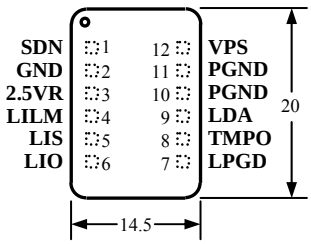

Figure 2. Pin Names and Locations

Figure 2 is the actual size top view of the ATLS100MA103, which shows the pin names and locations. Its thickness is 5mm. Table 1 shows the pin function descriptions.

Table 1. Pin Function Descriptions

Pin #	Pin Name	Pin Type	Description
1	SDN	Digital input	For ATLS100mA103: Shut down control. Negative logic. When the voltage is <0.7V, shutdown on; when the voltage is >1 V, shutdown off. For ATLS100mA103-PD: Shut down control. Positive logic. There is a pull-down resistor of 100k to the ground.

©Copyrights 2000-2016, Analog Technologies, Inc. All Rights Reserved. Updated on 12/15/2016

2	GND	Signal ground	Signal ground pin. Connect ADC and DAC grounds to here.
3	2.5VR	Analog output	2.5V reference voltage. It is used by the internal DACs as the reference voltage. It can source 3mA max, with 5μV_{P-P} noise @ 0.1Hz to 10Hz and 25ppm/°C stability max.
4	LILM	Analog input	Laser current limit set. 0V to 2.5V sets the laser current limit from 0 to 110mA linearly.
5	LIS	Analog input	Laser current set. 0V to 2.5V sets the laser current from 0 to 100mA linearly.
6	LIO	Analog output	Laser current output indication. 0V to 2.5V indicates the laser current from 0A to 100mA linearly.
7	LPGD	Digital output	Loop good indication. When the controller is working properly, this pin is pulled high. Otherwise, it is pulled low.
8	TMPO	Analog output	The driver internal temperature indication output. Operating internally temperature.
9	LDA	Analog output	Laser diode anode. Connect it to the anode of the laser diode. This pin is used to drive a laser of which the cathode is connected to the case and the case is connected to the ground. See below Figure 4.1, 4.2 or Figure 6.
10	LDC	Analog output	Laser diode cathode. Only connect to the cathode of the laser diode. See below Figure 4.1, 4.2 or Figure 6.
11	PGND	Power ground	Power ground pin. Connect it directly to power supply return rail.
12	VPS	Power input	Power supply. The driver works from 3.8V to 5.5V.

SPECIFICATIONS

Table 2. Characteristics ($T_{ambient}$ = 25°C)

Parameter	Value	Unit/Note
Maximum output current	100	mA
Output current noise (0.1Hz to 10Hz)	≤1.5	μA_{P-P}
Current set voltage range	0 ~ 2.5	V
Current limit set voltage range	0 ~ 2.5	V
Minimum drop out voltage	0.3 + 5×I_{OUT}	V
Power supply voltage range	3.8 ~ 5.5	V
Operating case temperature	–40 ~ 85	°C
Bandwidth of large signal	1	MHz
Bandwidth of small signal	1.2	MHz
Rise and fall times of small signal	300	nS
Rise and fall times of large signal	170	nS

OPERATION PRINCIPLE

The block diagram of the controller is shown in Figure 3.

The shut down control circuit is activated under one of these 3 circumstances: external shut down, output current exceeds the current limit, and the internal temperature exceeds 120°C.

When the controller is shut down by the external shutdown signal, it will restart upon detecting the releasing of the shutdown signal.

When it is shut down by the over current limit, the controller shuts down itself and restarts again by going through the soft-start process immediately. Therefore, the output current has a saw-tooth waveform: quick shut down, slow and ramp up.

When the controller is shut down by the over temperature, it will wait till the temperature goes below the temperature limit, 120°C. Usually it takes a few or tens of seconds for the controller to cool down before it restarts itself, depending on the thermal mass of the controller and its surrounding mechanical parts attached thermally, such as the PCB and its traces, the heat-sinks if any, etc.

When controller is shut down, the voltage reference is also shut down.

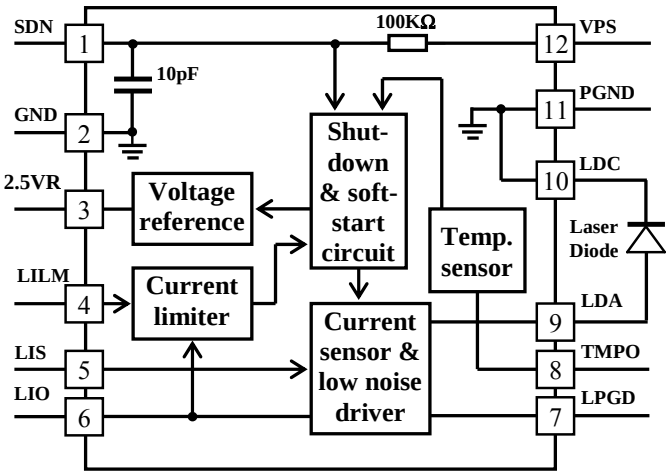

Figure 3. Block Diagram

©Copyrights 2000-2016, Analog Technologies, Inc. All Rights Reserved. Updated on 12/15/2016

Note: The Pin 7, LPGD, is pulled down by an open drain MOSFET and pulled up by a 5k resistor tied to VPS rail.

APPLICATIONS

Figure 4.1 and 4.2 show a typical application circuit. W1 and W2 set the output current limit and output current respectively. Resistor R1 and capacitor C1 form a low pass filter, to lower the noise from the voltage reference.

Laser diode D1 is connected between LDA and PGND. It is worth mentioning that the power supply return terminal should be connected to the pin 11 PGND and the cathode of the laser diode should be connected to the pin 10 PGND. These 2 nodes should not be connected together externally and they are connected together internally already by the controller.

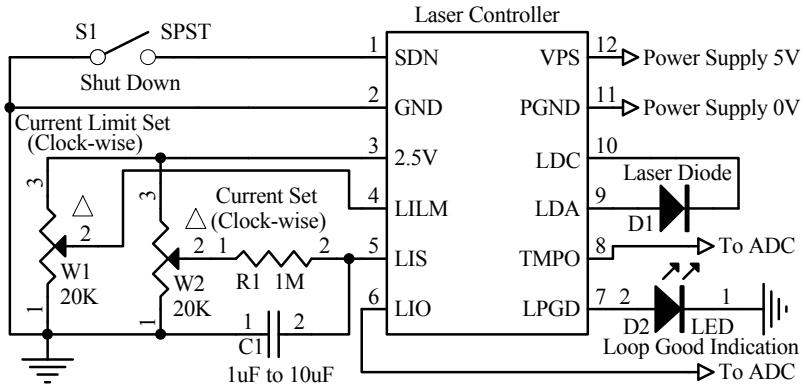

Figure 4.1 Typical Stand-alone CW Operation Schematic for ATLS100mA103

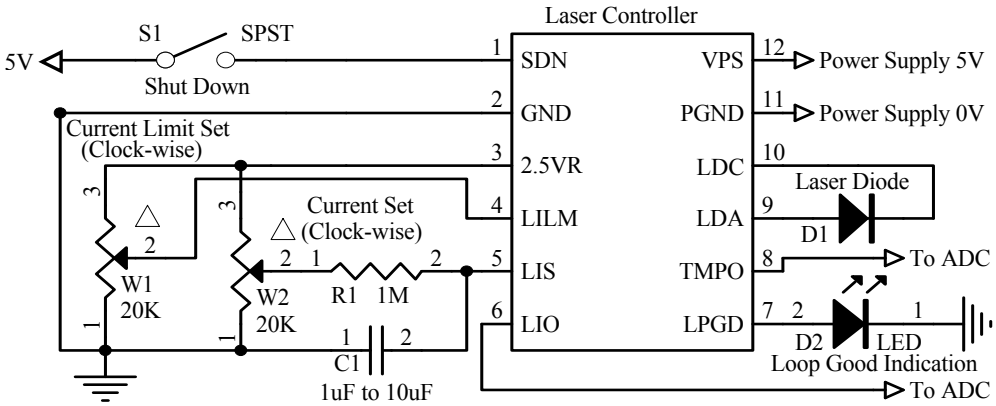

Figure 4.2. Typical Stand-alone CW Operation Schematic for ATLS100mA103-PD

Turning the Controller On and Off

The controller can be turned on and off by setting the SDN pin high and lower respectively. It is recommended to turn the controller on by this sequence:

To turn on: For ATLS100mA103, turn on the power by providing the power supply voltage to the controller, turn on the controller by releasing the SDN pin. For ATLS100mA103-PD, turn on the power by providing the power supply voltage to the controller, turn on the controller by connecting the SDN pin to VPS.

To turn off: turn off the controller by lowering the voltage of SDN pin, turn off the power by stopping the voltage supply on the VPS pin.

When not controlling by the SDN pin: leave it unconnected and turn on and off the controller by the power supply.

In Figure 4.1 and 4.2, S1 is the shut down switch. For ATLS100mA103, the internal equivalent input circuit of SDN pin is a pull-up resistor of 100k being connected to VPS in parallel with a 10pF capacitor to the ground. For ATLS100mA103-PD, the internal equivalent input circuit of SDN pin is a pull-down resistor of 100k being connected to the ground in parallel with a 10pF capacitor to the ground. The switch S1 can also be an electronic switch, such as an I/O pin of a micro-controller, with an either open drain or push/pull output. If not using a switch (S1) to control the laser, leave the SDN pin unconnected. D2 is an LED, indicating when the control loop works properly, that is: the output current equals to the input set value. This pin has an internal pull up resistor of 5k to the power supply pin, VPS, pin 10. The pull down resistance is 200Ω. This 5k resistor can drive a high efficiency LED directly. When higher pull up current is needed for driving such as a higher current LED, an external resistor can be placed between the VPS and the LPGD pins. Make sure that the resistor is not too small that the pull down resistor will not be able to pull the pin low enough when the controller loop is not good. When choosing not to use an LED for indicating

©Copyrights 2000-2016, Analog Technologies, Inc. All Rights Reserved. Updated on 12/15/2016

the working status, leave the LPGD pin unconnected.

The LPGD pin can also be connected to a digital input pin of a micro-controller, when software/firmware is utilized in the system.

Setting the Output Current

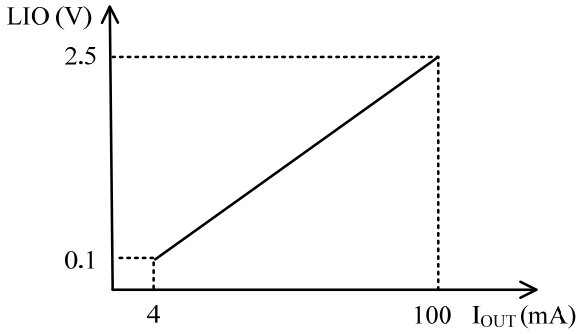

Figure 5. LIO & I_{OUT}

Figure 5 shows the relationship between LIO and the output current. When LIO is 0.1V, the laser driver starts to output the current, 4mA. The condition is LDA>1.2V.

The output current limit is set by adjusting W1, which sets input voltages of LILM, pin 4. The output current will be:

$I_{OUT} = 110 \times \text{LILM (V)}/2.5\text{V (mA)}$.

LILM should never be left float. Otherwise, the output current limit may be set to too high a value that the laser might be damaged.

The output current is set by adjusting W2, which sets input voltages of LIS, pin 5. The output current will be:

$I_{OUT} = 100 \times \text{LIS (V)}/2.5\text{V (mA)}$.

When no modulation is needed, it is suggested to use an RC low-pass-filter, the R1 and C1 in Figure 4.1, to lower the AC noise from the voltage reference source. The time constant of this filter can be between a few to 10's of seconds. The bigger the time cost, the lower the output noise, but the longer time will be needed to wait the output current to go up.

Both of LILM and LIS, only LIS, can be configured by using a DAC, to replace the W1 and W2 in Figure 4.1. Make sure that the DAC has output low noise, or, if no modulation is needed, an RC low pass filter by be inserted between the DAC and the LIS pin, similar as shown in Figure 4.1.

The LIS allows modulating the output current by a large signal of up to 1MHz in bandwidth. That is, when using a sine wave signal to modulate the LIS pin, the output current response curve will be attenuated by 3dB, or 0.71 times the full response magnitude in current. When using an ideal square-wave to modulate the output current at the LIS pin, the rise and fall time of the coutput current will be about 170nS (Large signal).

Wchen the modulation signal is a square-wave and low output noise is require, the low-pass-filter can still be used for lowering the output noise. Figure 6 shows such a circuit. The resistor R1 can be between 10k and 1M, depending on the error voltage caused by the switch leakage current. The LILM pin can be set by a POT as shown in Figure 4 or connect to 2.5VR.

It is recommended not to set the LIS pin to 0V, but keep it >0.05V at all the time. The reason is that the laser diode usually has a junction voltage of 2.5V, when setting the LIS pin voltage to 0V, the output voltage will warble between 0V and 2.5V, cause some oscillation slightly.

The LIO can still be used to monitor the output current when the LIS is modulated. The bandwidth of the LIO signal is >10MHz, more than enough for monitoring output current modulated by the LIS signal.

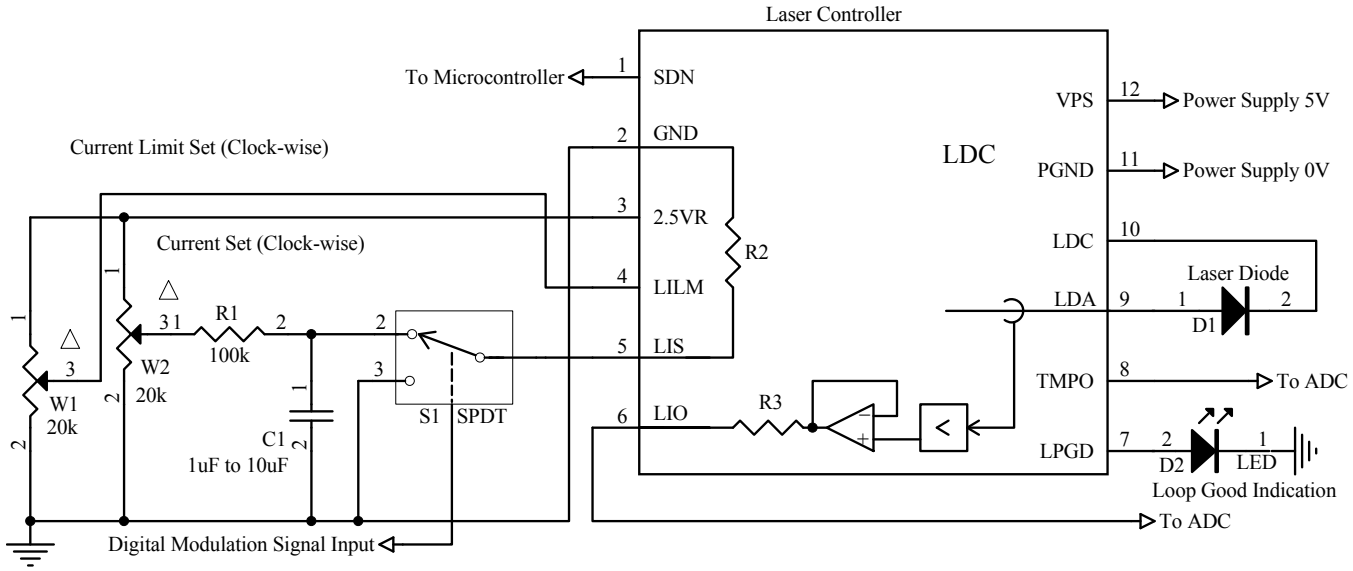

Figure 6. Low Noise Digital Modulation Circuit

©Copyrights 2000-2016, Analog Technologies, Inc. All Rights Reserved. Updated on 12/15/2016

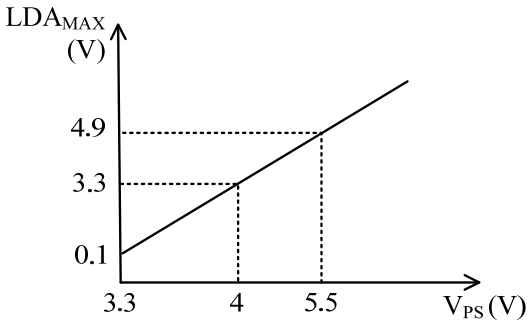

Figure 7. Relationship between VPS and LDA_{MAX}

Maximum LDA Output Voltage vs. Power Supply Voltage

The maximum LDA pin output voltage is depending on the power supply input voltage, V_{PS}. Their relationship is shown in Figure 7. Therefore, it is recommended that:

$V_{PS} \geq V_{LDMAX} + 1V$,

Where V_{LDMAX} is the laser diode's maximum possible forward voltage at the operation current.

Monitoring the Output Current

The output current of the controller can be monitored by measuring the voltage on the LIO pin. This feature is very useful for micro-controller based system where the ADC is available and monitoring the current in real time is required. This pin provides a very low noise voltage signal which is proportional to the output current:

LIO (V) = $I_{OUT} \times 25$ (V).

For example, when the output signal equals to 2.5V, the output current is 100mA.

The output impedance of this pin is 10Ω and it can be used to drive an ADC directly.

It can also be measured by a multimeter during debugging process.

Figure 8 below shows the relations among LIS, LIMS and I_{OUT}

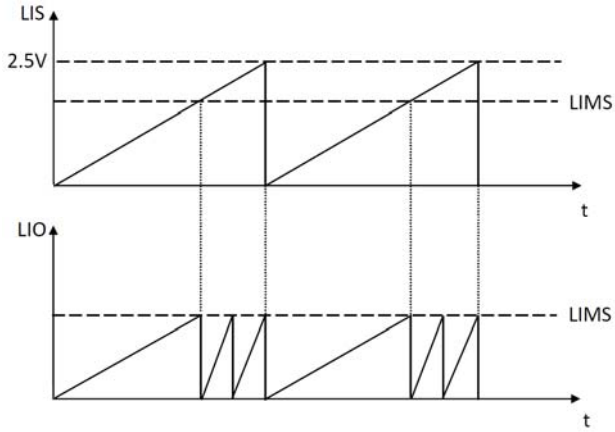

Figure 8. LIS & LIO

When LIS ≤ LIMS, I_{OUT} changes with LIS linearly; when LIS > LIMS, I_{OUT} oscillates between 0 and LIMS

Monitoring the Controller Internal Temperature

The controller internal temperature can be monitored by measuring the TMPO pin voltage. The relationship between the LMPO voltage and the temperature is:

$$T = -1525.04 + 10^3 \sqrt{2.4182 + \frac{1.8015 - TMPO}{3.479}} (°C) \quad (1)$$

where TMPO is the voltage on the TMPO pin.

This formula can be approximated by a linear equation:

$$T = 192.7 - 90.31 \times TMPO (°C) \quad (2)$$

Within the most commonly used temperature range of between 0°C to 100°C, the maximum error occurs at about 1.5V, at which the temperature error between the calculated data by using the formula (1) and the approximated data obtained by using the linear equation (2) is about 0.4°C, with the linear data being a little lower. The curves of the 2 sets of the data are plotted in Figure 10.

Please notice that the TMPO pin has a weak driving capability: the maximum sourcing current is 1μA and the maximum sinking current is 40μA.

The TMPO pin can also be used as an input control pin: when forcing the TMPO voltage to below 0.4V, the laser controller will be shutdown.

Controller Power Consumption

The power consumption of the controller can be calculated by:

$P_{DRIVER} = I_{OUT} \times (V_{PS} - V_{LDA}) + V_{PS} \times 0.02$,

where I_{OUT} is the output current;

V_{PS} is the power supply voltage;

V_{LDA} is the voltage across the laser diode.

When the P_{DRIVER} exceeds 1W, a heat sink might be needed. Under this situation, if prefer not to use the heat sink, this is an option: lowering the controller power consumption by reducing the power supply voltage V_{PS}. Please make sure:

$V_{PS} \geq V_{LDMAX} + 1V$,

where V_{LDMAX} is the maximum possible laser diode voltage.

First Time Power Up

Laser is a high value and vulnerable device. Faults in connections and damages done to the controller during soldering process may damage the laser permanently.

To protect the laser, it is highly recommend to use 3 to 4 regular diodes of >100mA to form a "dummy laser" and insert it in the place of the real laser diode, when powering up the controller for the first time. Use an oscilloscope to monitor the LDA voltage at times of power-up and power-down, make

©Copyrights 2000-2016, Analog Technologies, Inc. All Rights Reserved. Updated on 12/15/2016

sure that there is not over-shoot in voltage. At the same time, use an ammeter in series with the dummy laser, to make sure that the output current is correct.
After thorough checking free of faults, disconnect the dummy laser and connect the real laser in place.

The controller output voltage range for the laser is between 0.5 to 4V when powered by a 5V power supply.

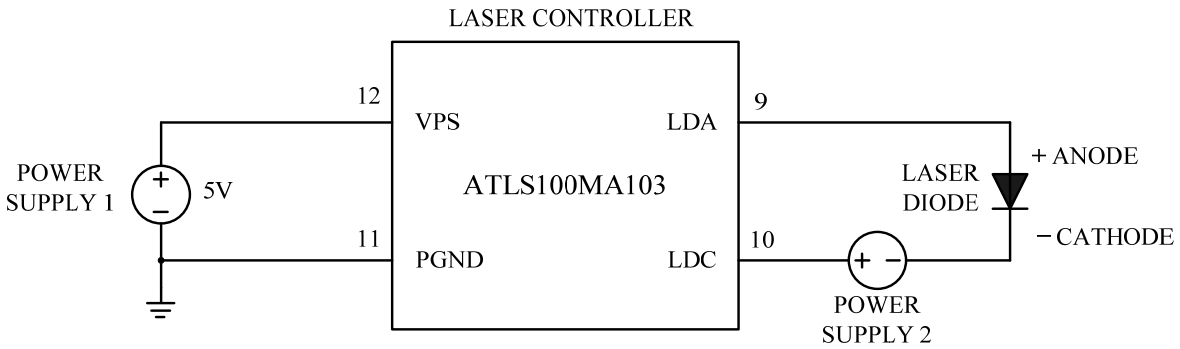

Figure 9. Driving High Voltage Laser Diodes

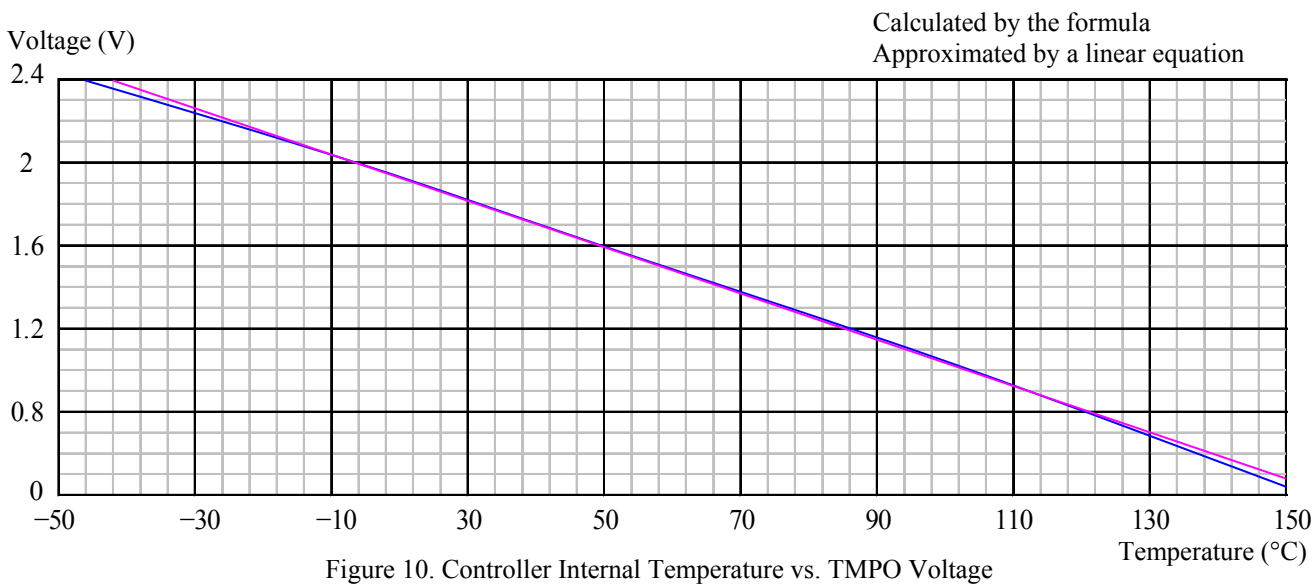

Figure 10. Controller Internal Temperature vs. TMPO Voltage

Driving High Voltage Laser Diodes

Some laser diodes have high forward voltage, such as 7V, while the laser driver ATLS100MA103D has a maximum output voltage of 4V. This section tells a way to drive such laser diodes by using this laser driver.

The schematic is shown in Figure 9, where Power Supply 1 is the power supply for the laser driver, Power Supply 2 is for increasing the laser driver's maximum output voltage.

Please notice that the power on sequence has to be in this way: turn on Power Supply 1, turn on Power Supply 2, then turn on the laser driver by driving SDN (Shutdown) pin to logic high.

The sequence for turning off the laser circuit is: turn off the SDN pin by pulling it down to the logic low, turn off Power Supply 1, then, turn off Power Supply 2.

To make sure the circuit works ok: turn on the laser, measure LDA voltage, it should be between 1V to 3V, at room temperature, the ideal LDA voltage is around 2V.

$V_{LDMAX} = V_{PS2} + 0.5V_{PS}$

Where, V_{LDMAX} is the maximum possible laser diode voltage; V_{PS2} is the voltage of Power Supply 2; V_{PS} is the voltage of Power Supply 1.

©Copyrights 2000-2016, Analog Technologies, Inc. All Rights Reserved. Updated on 12/15/2016

MECHANICAL DIMENSIONS AND MOUNTING

The ATLS100MA103 comes in 2 packages: through hole mount and surface mount. The former is often called DIP (Dual Inline package) or D (short for DIP) package and has a part number: ATLS100MA103D, and the latter is often called SMT (Surface Mount Technology) or SMD (Surface Mount Device) package and has a part number: ATLS100MA103S. See below Figure 11 and 12.

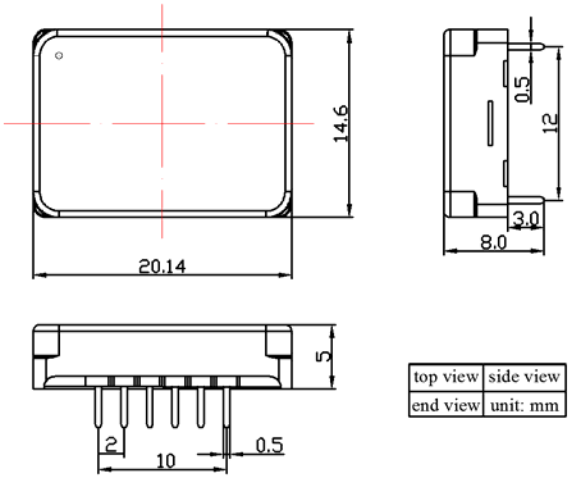

Figure 11. Dimensions of the DIP Package Controller

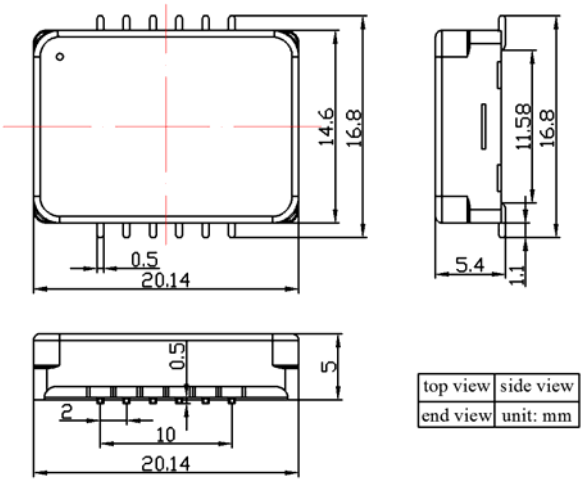

Figure 12. Dimensions of the SMT Package Controller

Figure 13 shows the foot print which is seen from the top side of the PCB, therefore, it is a "see through" view.

Figure 14 shows the view of the bottom side PCB foot-print.

"Tent" (i.e. cover the entire via by the solder mask layer) all the vias under the controller, otherwise, the vias can be shorted by the bottom plate of the controller which is internally connected the ground.

Please notice that, in the recommended foot print for the DIP package, the holes for pin 2 to 6, and 8 to 12 have larger holes than needed for the pins. This arrangement will make it easier for removing the controller from the PCB, in case there is a rework needed. The two smaller holes, for pin 1 and 7, will hold the controller in the right position.

It is also recommended to use large copper fills for VPS, PGND, and the LDC pins, and other pins if possible, to decrease the thermal resistance between the module and the supporting PCB, to lower the module temperature.

Please be notice that the SMT version cannot be soldered by reflow oven. It must be soldered manually.

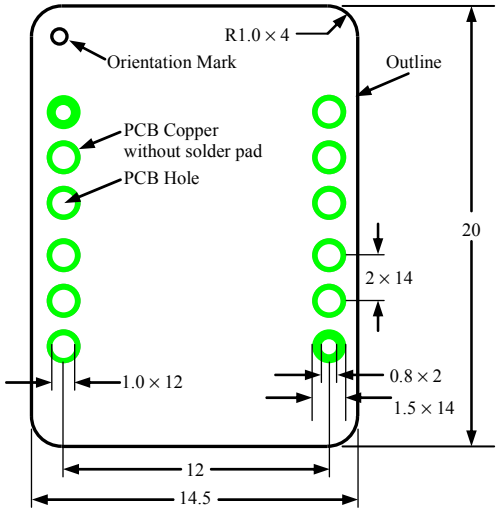

Figure 13. Top Side PCB Foot-print for the DIP Package

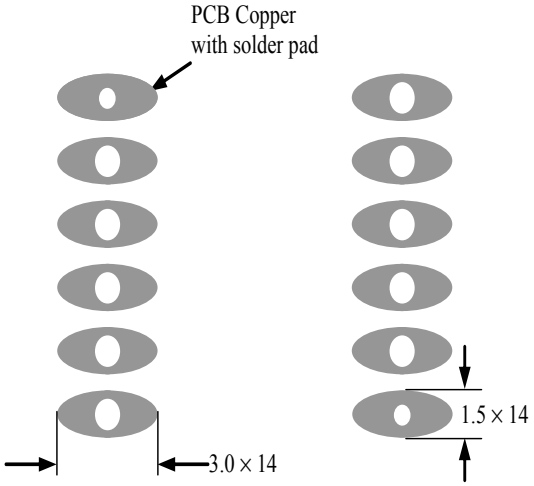

Figure 14. Top View of the Bottom Side PCB Foot-print

©Copyrights 2000-2016, Analog Technologies, Inc. All Rights Reserved. Updated on 12/15/2016

ORDERING INFORMATION

Table 3. Part Number

Part #	Description
ATLS100MA103D	Controller in DIP package
ATLS100MA103S	Controller in SMT package
ATLS100MA103-PD	Controller with a pull-down resistor of 100k to the ground.

WARNING: Both the surface mount and the through hole types of modules can only be soldered manually on the board by a solder iron of < 310ºC (590ºF), not go through a reflow oven process.

NOTE: The power supply may have overshoot, when happens, it may exceed the maximum allowed input voltage, 6V, of the controller and damage the controller permanently. To avoid this from happening, do the following:

1. Connect the controller solid well with the power supply before turning on the power.

2. Make sure that the power supply has sufficient output current. It is suggested that the power supply can supply 1.2 to 1.5 times the maximum current the controller requires.

3. When using a bench top power supply, set the current limit to >1.5 times higher than the maximum current the controller requires.

4. This laser driver can be evaluated by our evaluation board, ATLS1A103DEV1.0.

PRICES

Table 4. Unit Price

Quantity	1 – 9	10 – 49	50 – 199	200-499	≥500
ATLS100MA103D ATLS100MA103D-PD ATLS100MA103S ATLS100MA103S-PD	$68.0	$65.3	$61.5	$57.8	$54.0

RELATED PRODUCTS

Part #	Description	Comments
ATLS200MA103	Linear mode low noise 200mA constant current laser driver	V_{PS} = 3.8V~5.5V; V_{OUT} = 0V ~ (V_{PS}−1V); Output noise: ≤ 2.5μV_{P-P} @0.1Hz to 10Hz;
ATLS250MA103	Linear mode low noise 250mA constant current laser driver	V_{PS} = 3.8V~5.5V; V_{OUT} = 0V ~ (V_{PS}−1V); Output noise: ≤ 2.5μV_{P-P} @0.1Hz to 10Hz;
ATLS500MA103	Linear mode low noise 500mA constant current laser driver	V_{PS} = 3.8V~5.5V; V_{OUT} = 0V ~ (V_{PS}−1V); Output noise: ≤5μV_{P-P} @0.1Hz to 10Hz;
ATLS1A103	Linear mode low noise 1A constant current laser driver	V_{PS} = 3.8V~5.5V; V_{OUT} = 0V ~ (V_{PS}−1V); Output noise: ≤6μV_{P-P} @0.1Hz to 10Hz;
ATLS1A103DEV1.0	Evaluation board for ATLSXA103D series laser drivers	Evaluate these laser drivers: ATLS100MA103D, ATLS200MA103D, ATLS250MA103D, ATLS500MA103D and ATLS1A103D.

©Copyrights 2000-2016, Analog Technologies, Inc. All Rights Reserved. Updated on 12/15/2016

NOTICE

1. ATI warrants performance of its products for one year to the specifications applicable at the time of sale, except for those being damaged by excessive abuse. Products found not meeting the specifications within one year from the date of sale can be exchanged free of charge.
2. ATI reserves the right to make changes to its products or to discontinue any product or service without notice, and advise customers to obtain the latest version of relevant information to verify, before placing orders, that information being relied on is current and complete.
3. All products are sold subject to the terms and conditions of sale supplied at the time of order acknowledgment, including those pertaining to warranty, patent infringement, and limitation of liability. Testing and other quality control techniques are utilized to the extent ATI deems necessary to support this warranty. Specific testing of all parameters of each device is not necessarily performed, except those mandated by government requirements.
4. Customers are responsible for their applications using ATI components. In order to minimize risks associated with the customers' applications, adequate design and operating safeguards must be provided by the customers to minimize inherent or procedural hazards. ATI assumes no liability for applications assistance or customer product design.
5. ATI does not warrant or represent that any license, either express or implied, is granted under any patent right, copyright, mask work right, or other intellectual property right of ATI covering or relating to any combination, machine, or process in which such products or services might be or are used. ATI's publication of information regarding any third party's products or services does not constitute ATI's approval, warranty or endorsement thereof.
6. IP (Intellectual Property) Ownership: ATI retains the ownership of full rights for special technologies and/or techniques embedded in its products, the designs for mechanics, optics, plus all modifications, improvements, and inventions made by ATI for its products and/or projects.

©Copyrights 2000-2016, Analog Technologies, Inc. All Rights Reserved. Updated on 12/15/2016