High Voltage Operational Amplifier

AHVOPA1500V

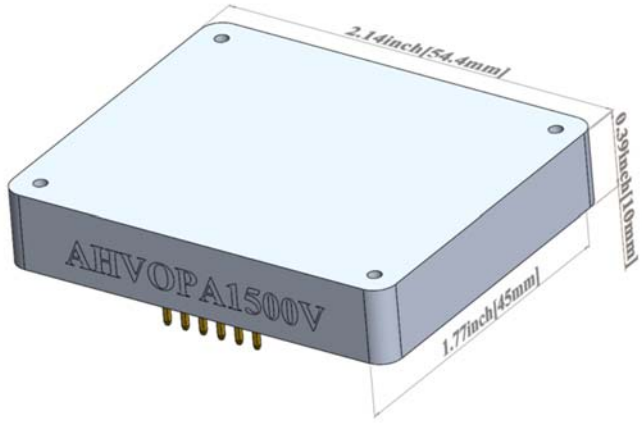

Figure 1.1. AHVOPA1500V without Heat Sink

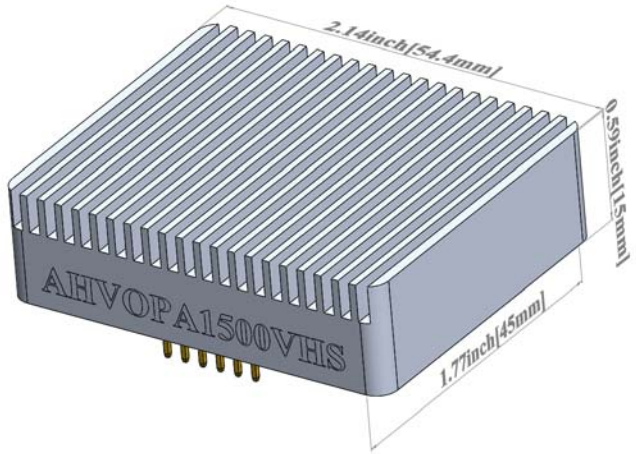

Figure 1.2. AHVOPA1500VHS with Heat Sink

FEATURES

- Maximum Input Voltage: 1500V
- Output Voltage Swing: 50~1450V
- Gain Bandwidth Product: 50MHz
- Peak Output Current: 180mA
- Max. Average Output Current: 100mA
- Slew Rate: 200V/µs
- Programmable Current Limit
- Over Temperature Protection
- Wide Temperature Range: −40°C~85°C
- Two Type Packages: with/without heat sink
- Package Heatsink Dissipation Power: 5W
- 100 % Lead (Pb)-free and RoHS Compliant

APPLICATIONS

- Semiconductor Test
- High Voltage Instrumentation
- Mass Spectrometer
- Optical Module

DESCRIPTION

The high voltage operational amplifier provides up to 1500V input voltage and 100mA load current without any additional circuit. The input port has over voltage protection and the output port has short-circuit protection. When the product gets overheated, the temperature sensing circuit will shut down by itself to prevent the amplifier from being damaged by the excessive heat.

The high voltage operational amplifier has a low noise, high precision and wide output swing, there is no reverse phase problem encountered in the same kind of products. The output can be stopped by the on/off (E/D) pin, which is in the loop pin and can be connected with the low voltage logic circuit, thus realizing non-interference input signal. It not only saves power, but also protects the load.

External compensation provides flexibility in choosing bandwidth and slew rate for the application. The power supply is independent and takes up very little space, so a high density board can be used.

With an appropriate current limiting resistor, the internal power consumption can be selected under any load. The product is suitable for a wide range of power supply voltage and achieves good power supply voltage control. The output stage can be biased into a linear operational amplifier.

A class H amplifier circuit includes a Buck converter and a charge pump, and the latter is used to generate voltages for powering an output driver in turn. A feedback path controls the loop. The circuit is particularly suitable as a high efficiency circuit for driving headphones or loudspeakers.

The pin names and locations are shown in Figure 2. The pin function description is shown in Table 1.

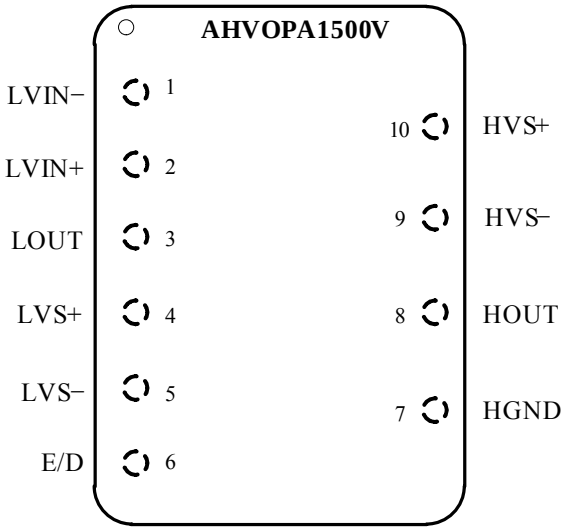

Figure 2. Pin Names and Locations

©Copyrights 2000-2021, Analog Technologies, Inc. All Rights Reserved. Updated on 5/12/2021

SPECIFICATIONS

Table 1. Pin Function Descriptions

Pin #	Pin Name	Type	Description
1	LVIN−	Analog Input	Low voltage inverting input pin.
2	LVIN+	Analog Input	Low voltage non-inverting input pin.
3	LOUT	Analog Output	Low voltage output.
4	LVS+	Power Input	Low voltage positive power-supply pin.
5	LVS−	Power Input	Low voltage negative power-supply pin.
6	E/D	Analog Output	Loop pin. Enable and disable.
7	HGND	Analog Output	High voltage ground pin.
8	HOUT	Analog Output	High voltage output.
9	HVS−	Power Input	High voltage negative power-supply pin.
10	HVS+	Power Input	High voltage positive power-supply pin.

Table 2. Characteristics ($T_{ambient}$=25°C)

Parameter	Test Condition	Value	Unit/Note
Power supply voltage		1500	V
Output current		100	mA
Bias current, initial		5	pA
Output voltage swing		50 ~ 1450	V
Gain bandwidth product		50	MHz
Slew rate		200	V/µs
Operating temperature range		–40 ~ 85	°C
Storage temperature range		–55 ~ 125	°C

©Copyrights 2000-2021, Analog Technologies, Inc. All Rights Reserved. Updated on 5/12/2021

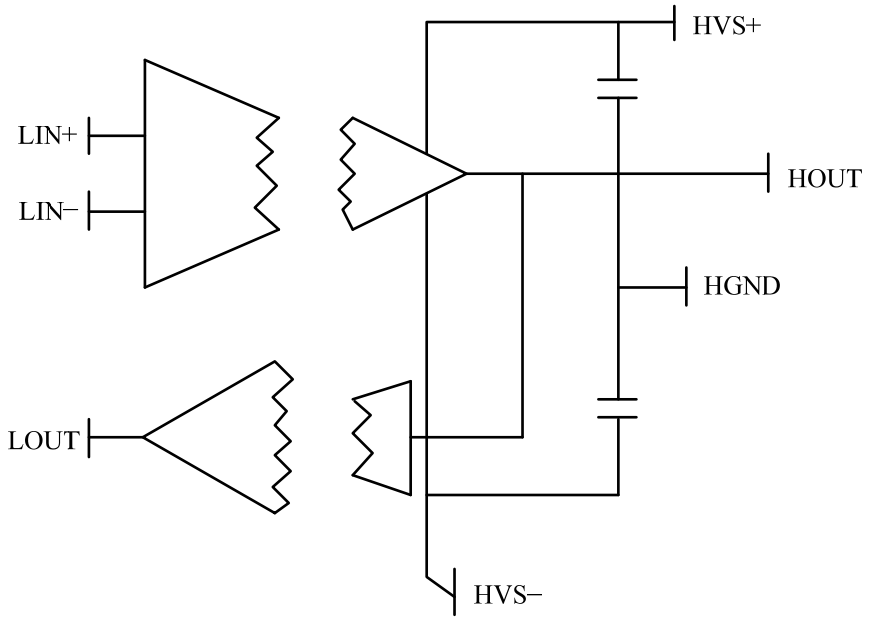

Figure 3. Block Diagram

APPLICATIONS

Single Power Operation

In some applications, a single power amplifier needs to be operated.

When the amplifier is operated by a single power supply, if the voltage on one of the output transistors is high enough, the possibility of secondary breakdown needs to be considered. In order to prevent damage to the amplifier, the output current must be limited, which can be achieved by keeping the load resistance greater than 5kΩ.

Design Requirement

High voltage op amplifier can be used in common operational amplifier circuits, but it increases the ability to allow higher supply voltage. A very common application of operational amplifiers is non-vertical amplifiers with a gain of 1V/V or higher.

ORDERING INFORMATION

Table 3. Part Number

Part #	Description
AHVOPA1500V	High voltage operational amplifier without heat sink
AHVOPA1500VHS	High voltage operational amplifier with heat sink

©Copyrights 2000-2021, Analog Technologies, Inc. All Rights Reserved. Updated on 5/12/2021

NOTICE

1. ATI warrants performance of its products for one year to the specifications applicable at the time of sale, except for those being damaged by excessive abuse. Products found not meeting the specifications within one year from the date of sale can be exchanged free of charge.
2. ATI reserves the right to make changes to its products or to discontinue any product or service without notice, and advise customers to obtain the latest version of relevant information to verify, before placing orders, that information being relied on is current and complete.
3. All products are sold subject to the terms and conditions of sale supplied at the time of order acknowledgment, including those pertaining to warranty, patent infringement, and limitation of liability. Testing and other quality control techniques are utilized to the extent ATI deems necessary to support this warranty. Specific testing of all parameters of each device is not necessarily performed, except those mandated by government requirements.
4. Customers are responsible for their applications using ATI components. In order to minimize risks associated with the customers' applications, adequate design and operating safeguards must be provided by the customers to minimize inherent or procedural hazards. ATI assumes no liability for applications assistance or customer product design.
5. ATI does not warrant or represent that any license, either express or implied, is granted under any patent right, copyright, mask work right, or other intellectual property right of ATI covering or relating to any combination, machine, or process in which such products or services might be or are used. ATI's publication of information regarding any third party's products or services does not constitute ATI's approval, warranty or endorsement thereof.
6. IP (Intellectual Property) Ownership: ATI retains the ownership of full rights for special technologies and/or techniques embedded in its products, the designs for mechanics, optics, plus all modifications, improvements, and inventions made by ATI for its products and/or projects.

©Copyrights 2000-2021, Analog Technologies, Inc. All Rights Reserved. Updated on 5/12/2021